PIPE SPACING CHART – DIMENSION "A"

FLG. RATING	PIPE DIA.	600# 24"	20"	18"	16"	14"	12"	10"	8"	6"	4"	3"	2"	1 1/2"	1"
150#	1"	21"	18"	17"	16"	14"	13"	12"	10"	9"	8"	6"	5"	5"	5"
	1 1/2"	21"	18"	17"	16"	14"	13"	12"	11"	9"	8"	7"	6"	5"	5"
	2"	21"	19"	17"	16"	15"	14"	13"	11"	10"	8"	7"	6"	6"	5"
	3"	22"	19"	18"	17"	15"	14"	13"	11"	10"	9"	7"	6"	6"	6"
	4"	22"	20"	18"	17"	16"	15"	14"	12"	11"	9"	8"	7"	7"	7"
	6"	23"	21"	19"	18"	17"	16"	15"	13"	12"	10"	9"	8"	8"	8"
	8"	24"	22"	20"	19"	18"	17"	16"	14"	13"	11"	10"	9"	9"	9"
	10"	25"	23"	21"	20"	19"	18"	17"	15"	14"	12"	11"	11"	10"	10"
	12"	26"	24"	22"	21"	20"	19"	18"	16"	15"	13"	13"	12"	12"	12"
	14"	27"	24"	23"	22"	20"	19"	18"	17"	15"	14"	14"	13"	13"	13"
	16"	28"	25"	24"	23"	21"	20"	19"	18"	17"	15"	15"	14"	14"	14"
	18"	29"	26"	25"	24"	22"	21"	20"	19"	17"	16"	16"	15"	15"	15"
	20"	30"	27"	26"	25"	23"	22"	21"	20"	18"	17"	17"	16"	16"	16"
	24"	32"	29"	28"	27"	25"	24"	23"	22"	21"	20"	19"	19"	18"	18"
300#	1"	21"	18"	17"	16"	14"	13"	12"	10"	9"	8"	6"	5"	5"	5"
	1 1/2"	21"	18"	17"	16"	14"	13"	12"	11"	9"	8"	7"	6"	5"	5"
	2"	21"	19"	17"	16"	15"	14"	13"	11"	10"	8"	7"	6"	6"	5"
	3"	22"	19"	18"	17"	15"	14"	13"	11"	10"	9"	7"	7"	7"	6"
	4"	22"	20"	18"	17"	16"	15"	14"	12"	11"	9"	8"	8"	7"	7"
	6"	23"	21"	19"	18"	17"	16"	15"	13"	12"	10"	9"	9"	9"	8"
	8"	24"	22"	20"	19"	18"	17"	16"	14"	13"	11"	11"	10"	10"	10"
	10"	25"	23"	21"	20"	19"	18"	17"	15"	14"	12"	12"	11"	11"	11"
	12"	26"	24"	22"	21"	20"	19"	18"	16"	15"	14"	13"	13"	13"	12"
	14"	27"	24"	23"	22"	20"	19"	18"	17"	16"	15"	15"	14"	14"	14"
	16"	28"	25"	24"	23"	21"	21"	20"	19"	18"	16"	16"	15"	15"	15"
	18"	29"	26"	25"	24"	22"	22"	21"	20"	19"	18"	17"	17"	16"	16"
	20"	30"	27"	26"	25"	24"	23"	22"	21"	20"	19"	18"	18"	18"	17"
	24"	32"	29"	28"	27"	26"	26"	25"	24"	23"	22"	21"	21"	20"	20"
600#	1"	21"	18"	17"	16"	14"	13"	12"	10"	9"	8"	6"	5"	5"	5"
	1 1/2"	21"	18"	17"	16"	14"	13"	12"	11"	9"	8"	7"	6"	5"	
	2"	21"	19"	17"	16"	15"	14"	13"	11"	10"	8"	7"	6"		
	3"	22"	19"	18"	17"	15"	14"	13"	11"	10"	9"	7"			
	4"	22"	20"	18"	17"	16"	15"	14"	12"	11"	9"				
	6"	23"	21"	19"	18"	17"	16"	16"	13"	12"					
	8"	24"	22"	20"	19"	18"	17"	16"	14"						
	10"	25"	23"	21"	20"	19"	18"	17"							
	12"	26"	24"	22"	21"	20"	19"								
	14"	27"	24"	23"	22"	20"									
	16"	28"	25"	24"	23"										
	18"	29"	26"	25"											
	20"	30"	27"												
	24"	32"													

FLG. RATING	PIPE DIA.	300# 24"	20"	18"	16"	14"	12"	10"	8"	6"	4"	3"	2"	1 1/2"	1"
150#	1"	20"	17"	16"	15"	14"	12"	11"	10"	8"	7"	6"	5"	5"	5"
	1 1/2"	20"	18"	16"	15"	14"	13"	11"	10"	9"	7"	7"	6"	5"	5"
	2"	21"	18"	17"	15"	14"	13"	11"	10"	9"	8"	7"	6"	6"	5"
	3"	21"	18"	17"	16"	15"	13"	12"	11"'	9"	8"	7"	6"	6"	6"
	4"	22"	19"	18"	16"	15"	14"	12"	11"	10"	9"	8"	7"	7"	7"
	6"	23"	20"	19"	18"	16"	15"	14"	12"	11"	10"	9"	8"	8"	8"
	8"	24"	21"	20"	19"	17"	16"	15"	13"	12"	11"	10"	9"	9"	9"
	10"	25"	22"	21"	20"	18"	17"	16"	14"	13"	12"	11"	11"	10"	10"
	12"	26"	23"	22"	21"	19"	18"	17"	15"	14"	13"	13"	12"	12"	12"
	14"	26"	24"	22"	21"	20"	19"	17"	16"	15"	14"	14"	13"	13"	13"
	16"	27"	25"	23"	22"	21"	20"	19"	18"	17"	15"	15"	14"	14"	14"
	18"	28"	26"	24"	23"	22"	21"	19"	18"	17"	16"	16"	15"	15"	15"
	20"	29"	27"	25"	24"	23"	22"	21"	19"	18"	17"	17"	16"	16"	16"
	24"	31"	29"	27"	26"	25"	24"	23"	22"	21"	20"	19"	19"	18"	18"
300#	1"	20"	17"	16"	15"	14"	12"	11"	10"	8"	7"	6"	5"	5"	5"
	1 1/2"	20"	18"	16"	15"	14"	13"	11"	10"	9"	7"	7"	6"	5"	
	2"	21"	18"	17"	15"	14"	13"	11"	10"	9"	8"	7"	6"		
	3"	21"	18"'	17"	16"	15"	13"	12"	11"	9"	8"	7"			
	4"	22"	19"	18"	16"	15"	14"	12"	11"	10"	9"				
	6"	23"	20"	19"	18"	16"	15"	14"	12"	11"					
	8"	24"	21"	20"	19"	17"	16"	15"	13"						
	10"	25"	22"	21"	20"	18"	17"	16"							
	12"	26"	23"	22"	21"	19"	18"								
	14"	26"	24"	22"	21"	20"									
	16"	27"	25"	23"	22"										
	18"	28"	26"	24"											
	20"	29"	27"												
	24"	31"													
600#	1"	20"	17"	16"	15"	14"	12"	11"	10"	8"	7"	6"	5"	5"	5"
	1 1/2"	20"	18"	16"	15"	14"	13"	11"	10"	9"	7"	7"	6"	5"	
	2"	21"	18"	17"	15"	14"	13"	11"	10"	9"	8"	7"	6"		
	3"	21"	18"'	17"	16"	15"	13"	12"	11"	9"	8"	7"			
	4"	22"	19"	18"	16"	15"	14"	12"	11"	10"	9"				
	6"	23"	20"	19"	18"	16"	15"	14"	12"	11"					
	8"	24"	21"	20"	19"	17"	16"	15"	13"						
	10"	25"	22"	21"	20"	18"	17"	16"							
	12"	26"	23"	22"	21"	19"	18"								
	14"	26"	24"	22"	21"	20"									
	16"	27"	25"	23"	22"										
	18"	28"	26"	24"											
	20"	29"	27"												
	24"	31"													

FLG. RATING	PIPE DIA.	150# 24"	20"	18"	16"	14"	12"	10"	8"	6"	4"	3"	2"	1 1/2"	1"
150#	1"	18"	16"	14"	14"	13"	12"	10"	9"	8"	7"	6"	5"	5"	4"
	1 1/2"	18"	16"	15"	14"	13"	12"	10"	9"	8"	7"	6"	5"	5"	
	2"	19"	16"	15"	14"	13"	12"	11"	9"	8"	7"	6"	6"		
	3"	19"	17"	16"	15"	14"	13"	11"	10"	9"	8"	7"			
	4"	20"	17"	16"	15"	14"	13"	12"	10"	9"	8"				
	6"	21"	18"	17"	17"	15"	14"	13"	12"	10"					
	8"	22"	19"	18"	18"	16"	15"	14"	13"						
	10"	23"	21"	19"	19"	17"	16"	15"							
	12"	24"	22"	21"	20"	18"	17"								
	14"	24"	22"	21"	20"	19"									
	16"	25"	23"	22"	21"										
	18"	26"	24"	23"											
	20"	27"	25"												
	24"	29"													
300#	1"														
	1 1/2"														
	2"														
	3"														
	4"														
	6"														
	8"														
	10"														
	12"														
	14"														
	16"														
	18"														
	20"														
	24"														
600#	1"														
	1 1/2"														
	2"														
	3"														
	4"														
	6"														
	8"														
	10"														
	12"														
	14"														
	16"														
	18"														
	20"														
	24"														

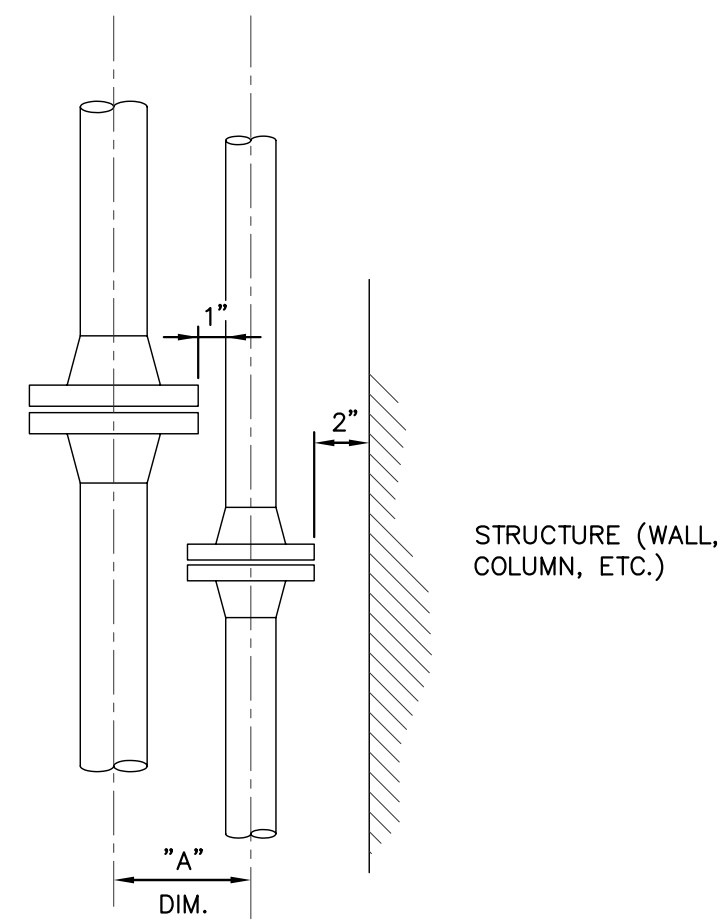

NOTES:

1. LINE SPACING DIMENSIONS ARE BASED ON A MINIMUM CLEARANCE OF 1" BETWEEN THE OUTSIDE DIAMETER OF THE FLANGE AND THE OUTSIDE DIAMETER OF PIPE.
2. SIDE MOVEMENT DUE TO EXPANSION OF HOT LINES MUST BE ALLOWED FOR AND SPACING INCREASED ACCORDINGLY
3. WHEN THE PIPE AND/OR FLANGES ARE INSULATED, THE INSULATION THICKNESS IS ADDED TO THE SPACING DIMENSION.
4. INCREASE SPACING MAY BE REQUIRED WHERE ORIFICE FLANGES ARE PRESENT.

C:\Documents and Settings\mlayport\My Documents\Junk\LIBR\PIPE SPACING CHART.dwg, 4/26/2007 3:23:12 PM, mlayport